REV	DESCRIPTION OF REVISION	ECN NO.	BY	DATE	APPROVED
A	Initial Release	———	H. wei	23/5/14	23/5/14

This document contains proprietary information and such informationmay not be disclosed to others for any purposes, not used for sales/marketing/procurement purposes without written permission

1 Electrical

1.1 Impedence	50 Ω
1.2 Frequency	DC~18GHz
1.3 Dielectric withstanding voltage	1000V(volts RMS)
1.4 Center contact resistance	≤ 3MΩ
1.5 Outer contact resistance	≤ 2MΩ
1.6 Insulation resistance:	≥5000MΩ

2 Environmental&Mechanical

2.1 Temperature range	-45℃~+125℃
2.2 RoHs Compliant	
2.3 Durability	>500 cycles

3 Materials&plating

3.1 Body:	Stainless Steel, Passivated
3.2 Insulator:	Teflon
3,3 Contact Pin:	Brass, gold plated
3.4 Nut:	Stainless Steel, Passivated
3.5 Gasket:	Silicon Rubber

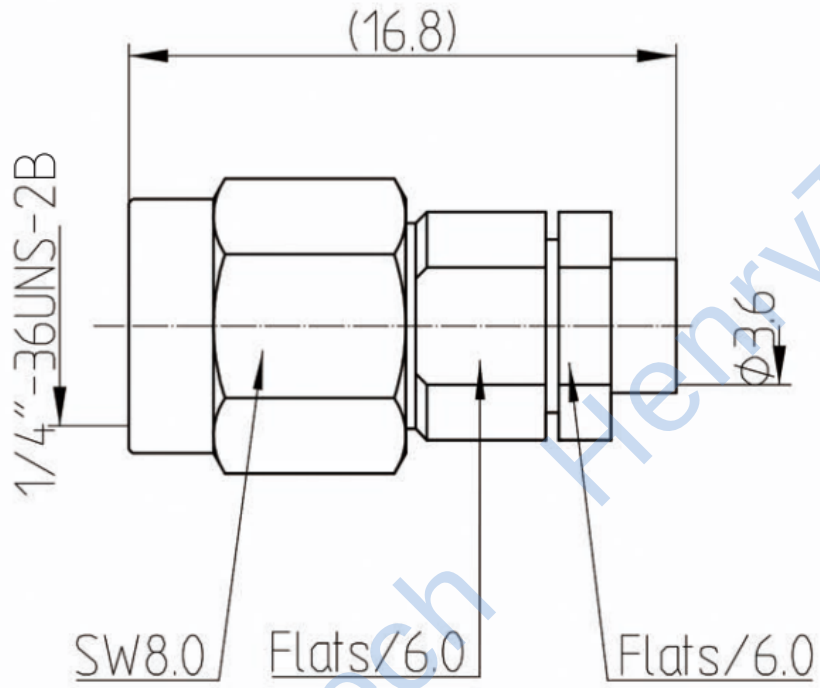

Notes:

1. ALL SPECIFICATIONS ARE SUBJECT TO CHANGE NOTICE AT ANY TIME
2. CUSTOMER OUTLINE DRAWING FOR REFERENCE ONLY

DRAWN:	H. wei	23/5/14
ENGINEER:	L. yu	23/5/14
APPROVED:	W. yi	23/5/14

TOLERANCES UNLESS OTHERWISE SPEFICIED
X ±0.50
.X ±0.20
.XX ±0.10
ANGLES ±1°

TITLE:
RF Coaxial Connector
SMA Male Conn. for
Gore3507 Cable

HenryTech

DIMENSION IN MILLIMETERS (mm)

PART NO:	SIZE:	SCALE:	SHEET:	REV:
HL-SMA-J3507G	A4	N/A	1/1	A

HenryTech