This document contains proprietary information and such informationmay not be disclosed to others for any purposes, not used for sales/marketing/procurement purposes without written permission

REV	DESCRIPTION OF REVISION	ECN NO.	BY	DATE	APPROVED
A	Initial Release	———	H. wei	1/8/14	1/8/14

1 Electrical

1.1 Impedance: 50 Ω
1.2 Frequency: DC-40GHz
1.3 VSWR: 1.25:1

2 Mechanical&Environmental

2.1 Temperature range -45°C ~+85°C
2.2 Durability(matings) >500
2.3 RoHs Compliant Yes

3 Material&Finish

3.1 Pin contact: Beryllium-Copper, gold plated
3.2 Body: Stainless Steel(SU303), Passivated
3.3 Insulators: PEI

4 Interface Standards

4.1 2.92 MIL-STD-348A

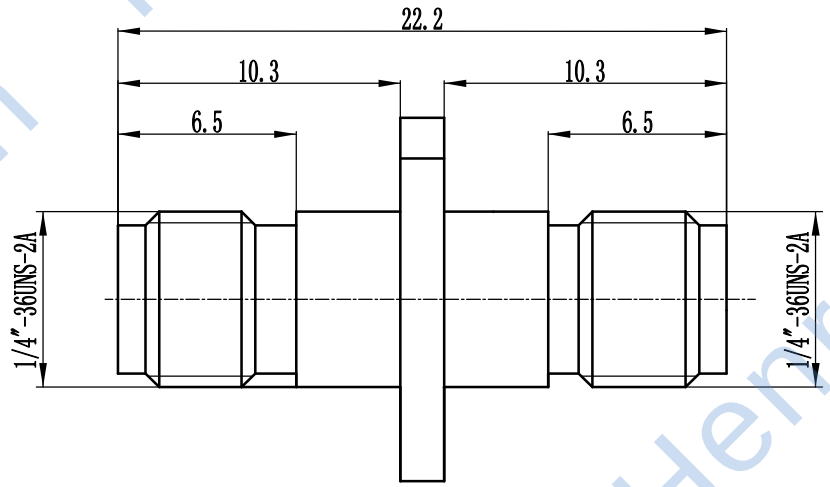

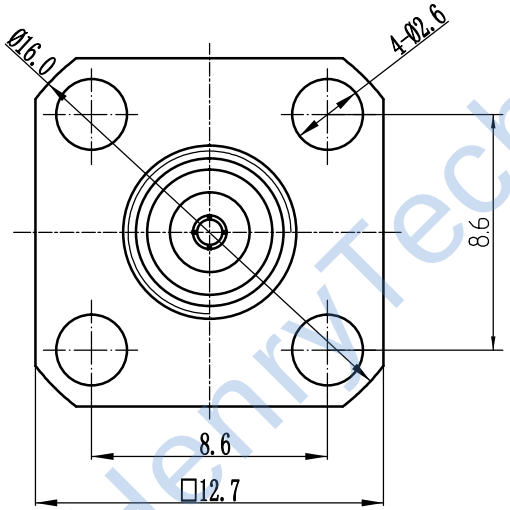

Notes:

1. ALL SPECIFICATIONS ARE SUBJECT TO CHANGE NOTICE AT ANY TIME
2. CUSTOMER OUTLINE DRAWING FOR REFERENCE ONLY

DRAWN: H. wei 1/8/14
ENGINEER: L. yu 1/8/14
APPROVED: W. yi 1/8/14

TOLERANCES UNLESS OTHERWISE SPEFICIED
X ±0.50
.X ±0.20
.XX ±0.10
ANGLES ±1°

TITLE:
Precision Adapter
2.92 Female to 2.92 Female
Flange Adapter

HenryTech

DIMENSION IN MILLIMETERS (mm)

PART NO: HL-2.92-KFKG
SIZE: A4
SCALE: N/A
SHEET: 1/1
REV: A

HenryTech